Fix-EZ

- 7° or 15° module tilt options available[1]
- Integrated grounding with **ETL Listed**[2] **Rapid**[2+] module clamps
- Wind tunnel tested for low ballast
- Multifunctional components
- Includes mounting system and ballast blocks[3]
- Designed for modules in a single row configuration in portrait only

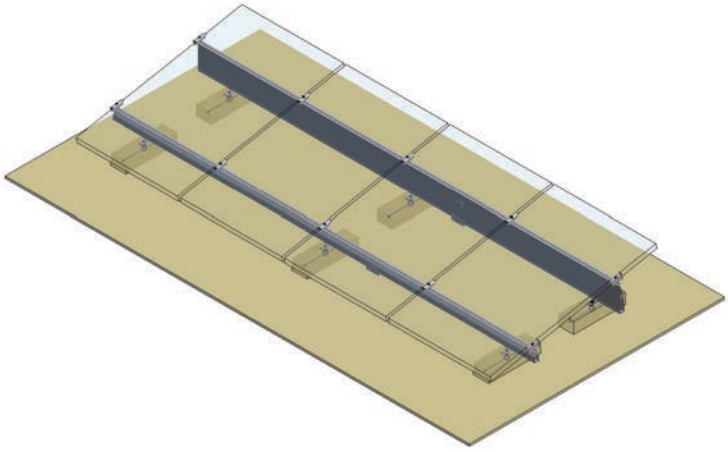

Schletter introduces the **Fix-EZ™,** a new system in the Fix Series™ for flat roof applications. Named for its truly simplistic approach to PV system installations the Fix-EZ allows for quick on-site assembly, at an exceptional price.

Provided as a complete mounting system, the Fix-EZ includes several multifunction components to maximize functionality and minimize cost. Ballast blocks act as ballast weight as well as system support. Module mounting rails support modules and act as windbreak with Rapid[2+] module clamps securely holding modules in place while bonding/grounding them to the system. Engineered to be 100% IBC code compliant the **Fix-EZ reduces amount of components and costs, without compromising design safety**.

Unique to the Fix-EZ system are durable ballast blocks equipped with threaded steel inserts, securely connecting system and ballast. An L-Foot, which is pre-assembled with a KlickTop™ connector, attaches directly to the ballast block, further simplifying installation. Depending on design requirements, ballasts can span up to ten feet, greatly reducing roof loads.

Ease of assembly, reduced roof loading, and fewer system components—the Fix-EZ is sure to make the next roof mount installation hassle free.

Systems are provided with a standard 10-year warranty. For more information on Fix-EZ, please see:

- Fix-EZ Installation Guide
- Rapid[2+] Grounding Clamp Installation Guide
- Torque Table

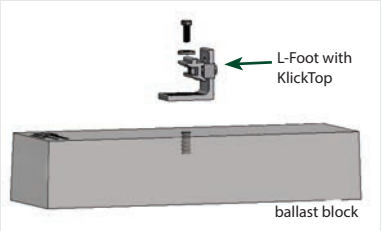

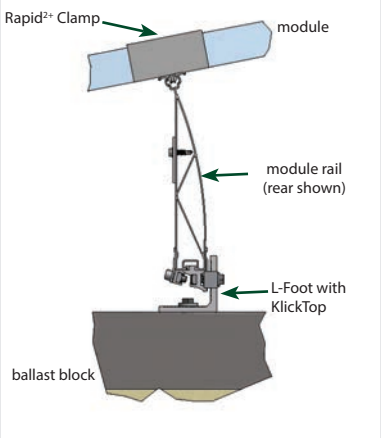

1. **Position ballast blocks[3] based on system layout**
2. **Attach L-Foot with KlickTop Connection**
3. **Connect front and rear module bearing rails by clicking into place on KlickTop, tighten KlickTop to specifications**
4. **Snap end and middle Rapid[2+] module clamps into place, tighten to specifications**

Project Details

For faster turnaround time on projects, please provide a project layout. Schletter engineers will then create a project-specific ballast grid, allowing for accurate positioning of ballast blocks. For systems over 50 kW, structural calculations and P.E. stamps are provided at no additional charge.

Technical Data

Material	System rails, L-Foot, and KlickTop attachment made of aluminum Ballast block made of 5,000 psi reinforced, air entrained concrete (20”x 6”x 4” at 36.5 lbs each) Optional rubber pad for ballast block, material varies based on roofing substrate specification
Forms	Suitable for flat rooftops; tilt specified in ranges 7° or 15°[1]
Structural analysis	Structural analysis according to the IBC 2006, 2009, or 2012 Required number of ballast blocks based on wind tunnel testing
System Structure	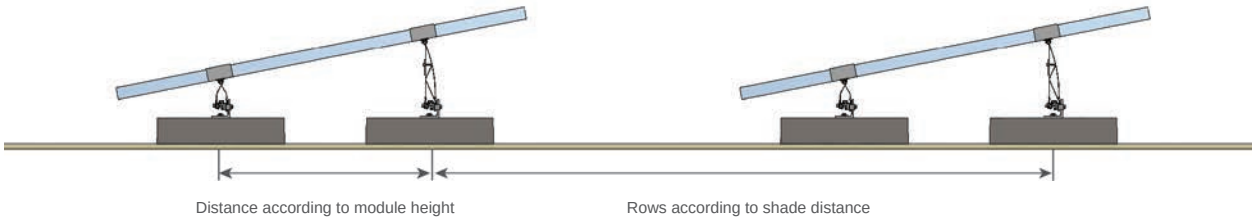
Seismic Considerations	Connections to meet seismic requirements available with minimal roof penetration
Ordering Options	Wire management available including cable clips and trays Optional rubber pad for ballast block, material varies based on roofing substrate specification

For a quote, please contact technical sales at 520-289-8700 or at sales@schletter.us. More information on all Schletter products can be found on-line at www.schletter.us.

[1] Module tilt will vary depending on module manufacturers connection requirements: 7° tilt option ranges from 4 to 7 degrees, 15° tilt option ranges from 10 to 15 degrees.
[2] Grounding & Bonding Equipment (UL 467 and CAN/CSA-C22.2 No. 41), identified with ETL Listed Mark. See Intertek© ETL Listed Directory for more information.
[3] Mounting system only, does not include modules.
[4] Protective pad is not included.

MI-017 012013

© Schletter Inc • 3761 E Farnam Place • Tucson, Arizona 85706 • Tel: (520) 289 - 8700 • Fax: (520) 289 - 8696
E-mail: mail@schletter.us • www.schletter.us